NeoTimber
ALUMINIUM BALUSTRADES

Wire Railing System - Straight

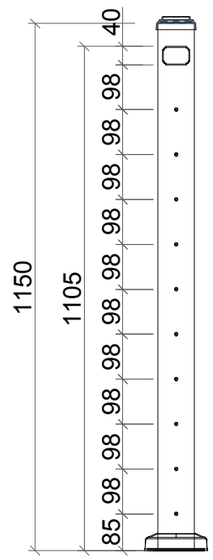

Sectional Drawing

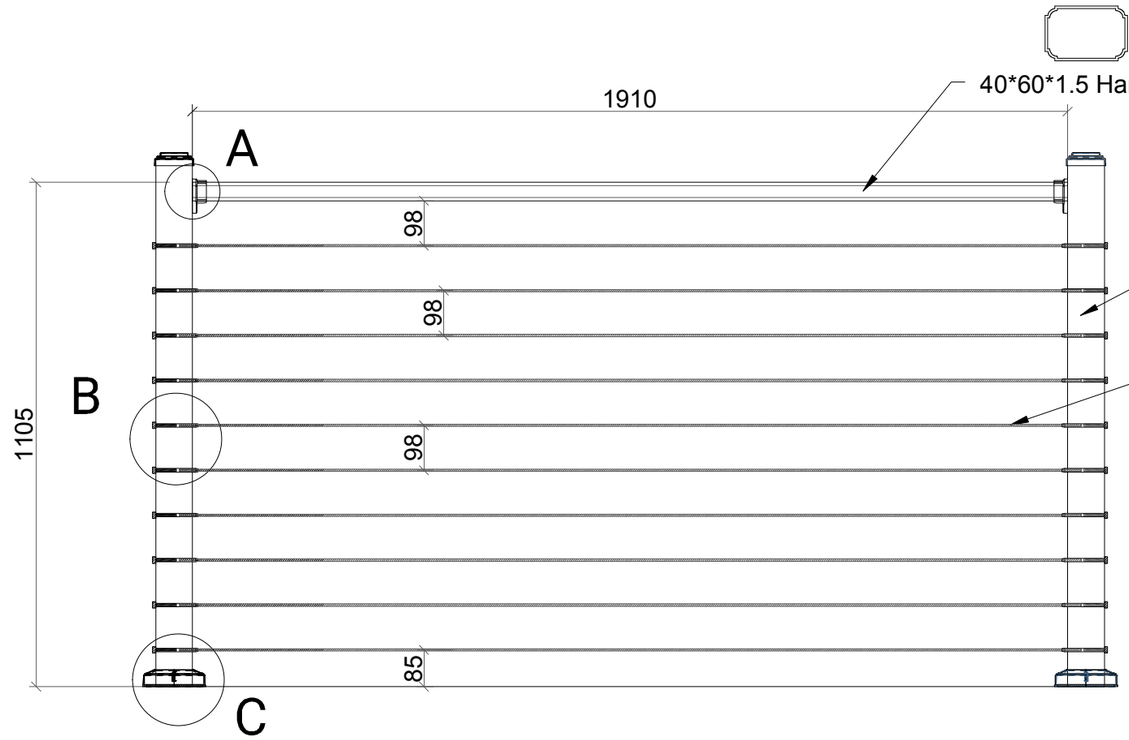

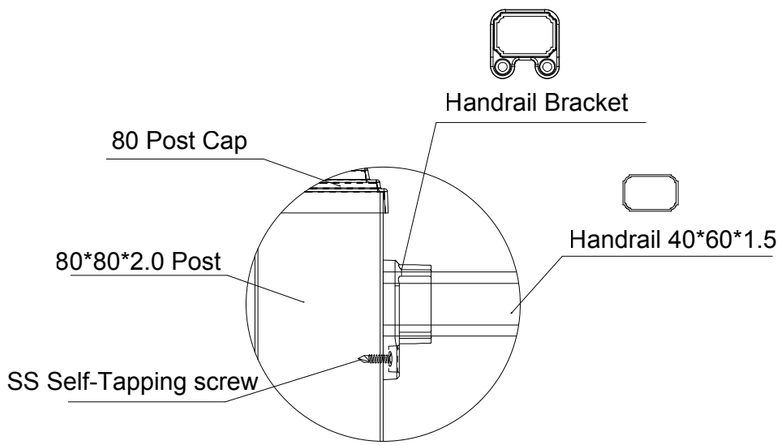

A: Details

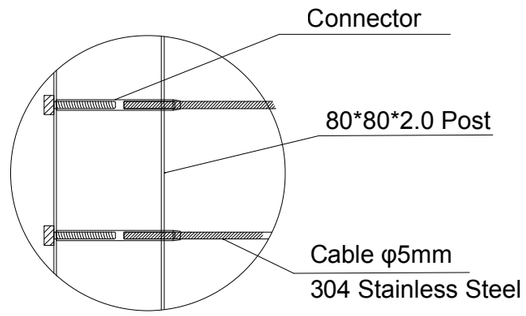

B: Details

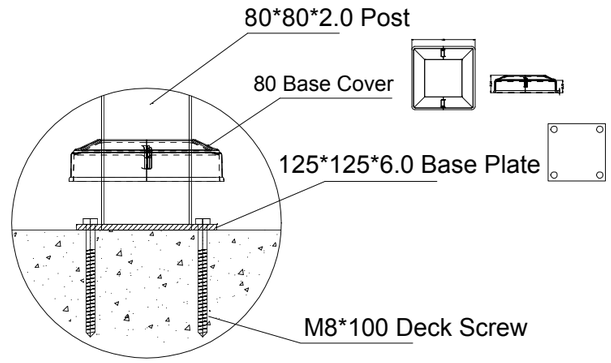

C: Details